Installation and Operation Manual for the PERENIO IONIC SHIELD™ Cold Plasma Emitter

(Model: PEWOW01COV, PEWOW01COVUK)

March, 2022

Table of Contents

Table of Contents 3
Introduction 5
Copyrights 5
Disclaimer 6
Responsibility and Technical Support 8
Conformance to Standards 9
Warnings and Restrictions 10
1 General Description and Specifications 16
1.1 Device Purpose 16
1.2 Technical Specification 20
1.3 Device package 22
1.4 Packaging and Labelling 22
2. Installation and Setup 23
2.1 Preparation for Work 24
2.2 Operation Process 25
2.3 Removing and Replacing the CoV Capsule 26
3 Maintenance and Repair 29
4 Warranty 30
5 Storage, Transportation and Disposal of Devices 32
6 Other information 33
7 Troubleshooting 34
8 Glossary 35

Figures and Tables

Figure 1 – Exterior (Side view) 17
Figure 2 – Exterior (Top view) 17
Figure 3 – Buttons, connectors and indicators 18
Figure 4 – Scope of Supply 22
Figure 5 – Examples of installation 23
Figure 6 – View of the sticker atop the capsule 24

Figure 7 – Tightening the capsule 24
Figure 8 – Capsule replacement process 27

Table 1 – LED Indicator statuses 19
Table 2 – Basic technical specifications 20
Table 3 – CoV Capsule 27
Table 4 – Typical Errors and Troubleshooting Methods 34

Introduction

PERENIO IONIC SHIELD™ is a Cold Plasma Emitter with CoV capsule (model PEWOW01COV, PEWOW01COVUK) (hereinafter also referred to as the "Device" or "Cold Plasma Emitter"). The Device intends to significantly reduce and suppress the level of viral concentration in the enclosed area of application (air and surfaces), as tested and confirmed by accredited laboratories. The viral concentration refers to the family of viruses called coronaviruses. This includes the Severe acute respiratory syndrome coronavirus 2 (SARS-CoV-2).

The Device emits complex groups of negative and positive ions of Mg, K, Pt, Au, Zn, H and is developed to be used by human beings for significant reduction of the viral load caused by known coronaviruses. It has also undergone a clinical evaluation demonstrating its conformity with the relevant general safety and performance requirements. Such clinical evaluation will be ongoing throughout the life cycle of the Device.

Classification of the Device: This Device is not a medical device.

Ozone concentration and radiations are tested below background levels. Ozon is below limits as specified in Clause 32 of EN/IEC 60335-2-65.

The present Installation and Operation Manual (hereinafter also referred to as the "Manual") contains a detailed description of the Device, as well as instructions for its installation and operation.

Copyrights

Any eventual mentioning of other company names and equipment in the present document is made solely for the purpose of clarifying and describing the device operation and shall not infringe on the third party's intellectual property rights.

Disclaimer

ANY PERSON ACQUIRING THIS PERENIO IONIC SHIELD™ model PEWOW01COV, PEWOW01COVUK ACCEPTS THIS DESCLAIMER IN FULL AND ASSUMES FULL RESPONSIBILITY FOR USING THE DEVICE IN ACCORDANCE WITH THE DIRECTIONS OF USE, AS WELL AS FOR ANY CONSEQUENCES RESULTING FROM ANY INAPPROPRIATE USE IN CONTRAST WITH THE INSTRUCTIONS OUTLINED IN THIS MANUAL.

1. Although rigorous testing was performed in accordance with the adopted and published virucidal standards, under no circumstances Perenio IoT and/or the manufacturer of the Device claim total and absolute neutralization, and subsequent impossibility of infection whilst using the Device. Perenio IoT and/or the manufacturer of the Device shall not be liable to any person, who while using the Device becomes ill or infected with any virus. Numerous factors play role in virus transmission, which may occur in different ways and cannot be completely eliminated, even if most of the viruses are neutralized in the enclosed area of application as per the instructions herein.
2. The user understands and accepts that the possibility of getting a viral infection heavily relies on each individual's unique immune system response, thus the reduction of the viral load in the enclosed area of application, does not completely eliminate the possibility of transmission, even whilst using the Device.
3. Any claims by the manufacturer and/or Perenio IoT for neutralization, suppression and destruction of viruses, relate only to the acceptable decrease of the viral load in the enclosed area of application, tested and confirmed in line with the adopted international standards.
4. The cases of any adverse reactions to the ions emitted are regarded extremely rare and are highly unlikely, as necessary measures have been taken to ensure the acceptable degree of emission, regulated by international standards. However, if an individual, whilst using the Device observes any adverse side effects, he/she is strongly advised to stop immediately the use of the Device and consult a healthcare professional.
5. While the Device is intended for significant reduction of level of the viral load in the enclosed area of application, Perenio IoT and/or the manufacturer of the Device do not claim any therapeutic properties of the Device and they shall not

be held liable in relation to any underperformance in relation to any kind of therapeutic use.

6. Perenio IoT and/or the manufacturer of the Device cannot assume any responsibility for any potential misinformation of the end-users by distributors and/or resellers of the Device. Any claims in relation to the properties of the Device which are not concurring with the officially published and regularly updated specifications: intended use, performance, antiviral and anti-pathogen properties, which can be found on the official website perenio.com, are void and cannot serve as a legal ground for any claims against Perenio IoT and/or the manufacturer.
7. Users understand and accept that the use of multiple Devices at once, as well as any attempt to compromise the capsule's enclosure, in a closed space, may lead to release of high density of ions into the air, which may lead to side effects. The use of multiple Devices must be in accordance with the restrictions contained herein.
8. Perenio IoT and/or the manufacturer are not responsible and will not accept any liability for claims for damages due to performance related issues, if:
   - The Device is used in a manner which is not as prescribed in the Quick Start Guide and/or this Manual;
   - The body of the Device or the capsule have been tampered with;
   - The input voltage and amperage are in any way changed;
   - The top of the capsule has been in any way obstructed or covered with foreign objects;
   - The working and/or storage temperature is not within the range specified by the manufacturer;
   - The working and/or storage humidity is not within the range specified by the manufacturer;
   - The Device is used in high humidity environment like bathrooms or saunas;
   - The Device is used in less than four (4) hours after been taken from cold or humid environment;
   - The Device is immersed in water or water was splashed at it, or it is positioned in a wet place or a wet surface, resulting in water contact with electrical parts;
   - The user attempts to remove or replace the in-built battery;
   - A non-original power adapter is used to recharge the Device;
   - The Device is given to children, or put at ease of reach, with any subsequent malfunctions as a result of such treatment;
   - The Device is used without the capsule;
   - The Device is used with a compromised capsule, or the counterfeit, or self-made capsule.

- The Device is used in any manner that a reasonable person would deem to be inappropriate or dangerous.

Responsibility and Technical Support

The present Manual is prepared in accordance with all necessary requirements and contains detailed information on the Device installation, configuration and control, valid as of the date of its last update.

Perenio IoT reserves the right to make corrections or changes to this Manual without prior notice to the users of the Device and shall not be responsible for any consequences which may arise from the use of an outdated version of the Manual, as well as for any possible technical and/or typographical errors, either omitted or accidental, or any related damage that may result from the use of the Device or the present document.

The latest version of the Manual will always be available at **perenio.com/documents.**

In case of any discrepancies between the language versions of the Manual, the English version shall prevail.

For any technical issues, please contact the Tech Support Department at **perenio.com**.

Manufacturer:
SIA Joule Production
Bauskas iela 58A-15, Riga, LV-1004, Latvia
www.joule.lv

Manufactured for:
Perenio IoT spol s r.o.
Na Dlouhem 79, Ricany – Jazlovice 251 01, Czech Republic
perenio.com

Conformance to Standards

- Perenio IoT has been certified in accordance with EN ISO 9001 and EN ISO 14001

The Device is CE certified and complies with the requirements of the following European Union legislation:

- 2014/35/EU Low Voltage Directive;
- 2004/30/EU Electromagnetic Compatibility Directive.

The Device complies with the UKCA marking requirements for selling the Device in the UK

The Device has passed all procedures of assessments established in technical regulations of the Eurasian Customs Union and conforms with standards of the Eurasian Customs Union

The national conformity mark of the Ukraine indicating that the device meets requirements of all applicable technical regulations

The Device complies with the requirements of Restriction of the Use of Certain Hazardous Substances (RoHS) in Electronic and Electrical Equipment (2011/65/EU Directive)

The external power source complies with STB 2463-2020 where requirements for the environmental design of external power sources in the area of average effective efficiency and power consumption in idle mode are established

The crossed-out trash can symbol is used to label electrical and electronic equipment, and indicates its separate collection.

The symbol is given in accordance with the Directive 2012/19/EU on Waste Electrical and Electronic Equipment (WEEE) and indicates that this equipment requires separate collection at the end of its life and must be disposed of separately from unsorted household waste.

To protect the environment and human health, please dispose of used electrical and electronic equipment according to approved safe disposal guidelines

BG	CZ	DE	DK	EE	EL	ES
FI	FR	HR	HU	IT	LT	LV
NL	NO	PL	RO	SE	SI	SK

Information about certificates received is indicated in Section 7 of this document. Copies of certificated and declarations can be found in the appropriate section on the website **perenio.com**.

Warnings and Restrictions

Prior to installation and operation of the Device, the user shall carefully read and understand information contained herein.

ATTENTION! Warnings, precautions, and instructions specified in this document may not contain every possible hazardous situation. Please use the common sense when operating the Device.

ATTENTION! Electric shock hazard! Do not touch live parts!

ATTENTION! This device is not a medical device!

Warning Symbols and Icons

Electric shock hazard. The Device contains live parts

Indication on the need for the user to consult the Installation and Operation Manual for important information such as warnings and cautions

The Device is for indoor installation only

	Indication of the Device manufacturer
REF	Indication of the manufacturer's catalogue number (product article) of the Device. Same model is in products catalog of Perenio IoT so that it can be easily identified
+40°C 0°C	Indication of the temperature limits to which the Device can be safely exposed
70% 0%	Indication of the range of humidity to which the Device can be safely exposed
106 kPa 86 kPa	Indication of the range of atmospheric pressure to which the Device can be safely exposed
	Do not attempt to repair the Device, because it may cause electric shock or other injury and will also void manufacturer's warranty
	Do not touch the Device with wet hands
	Exposure of the Device to any liquids is prohibited
	Indication that the Device can be broken or damaged if not handled carefully
	Indication that the Device needs to be protected from moisture
IP30	Indicates protection from particles of more than 2.5mm in diameter and lack of protection from water

General Safety Operation Rules and Precautions

1. The Device shall only be used as described in the Quick Start Guide and this Manual, to ensure maximum level of safety and in order to achieve its envisaged result. Any unintended use may cause fire, electric shock, and other hazards, as well as injury to persons.

2. The Device shall not be used for treatment purposes.
3. The Device shall never be used as the only source of protection against viral infections.
4. The Device must be at a room's temperature before it is operated. Failure to comply with this requirement may cause electric shock and other hazards, as well as will void the manufacturer's warranty.
5. Do not use the Device in areas where sudden changes of the temperature occur even if the ambient temperature range is within the specified limits, as this may cause condensation.
6. The Device must not be immersed in liquids, and the liquids must not be allowed to enter the Device.
7. Do not power on the Device without the capsule, or when the capsule is not installed or not properly tightened (i.e. not in the "CLOSED" position).
8. Only the original capsule shall be used with the Device.
9. Do not block the capsule opening with hands or any other object.
10. Always power off the Device before removing or installing the capsule.
11. The Device shall not be kept, stored or used outdoors, as well as in areas exposed to direct sunlight, moisture and/or dust, or near air humidifiers or heaters.
12. The Device must not be used in areas exposed to conductive powder or dust, oil mist, salt, organic solvent, machining chips, particles or cutting oil (including water and any liquids), etc.
13. The Device must not be operated in areas where combustible gas, aerosol units, oxygen and/or hydrogen are stored, or where the air pressure is more than two times higher or lower than the atmospheric pressure.
14. The Device must not be operated in areas where gas-powered stoves and ovens, as well as flammable or combustible units or vapors may be present.
15. It is forbidden to drop or insert objects into any openings of the Device or the capsule.
16. The Device must not be operated in areas with strong electromagnetic noise or where static electricity is generated to the Device.
17. The Device must not be operated in areas subject to potential lightning strikes or where the direct impact or vibration may be applied to the Device.
18. The Device must not be operated if it is damaged or cracked in any way.
19. It is not allowed to drop, throw or disassemble the Device or any part of it, as well as attempt to repair them on one's own.
20. Do not throw the Device into the fire.
21. Do not operate the Device under a blanket or pillow.
22. Use a dry cotton cloth to clean the Device. The Device must be turned off and unplugged before cleaning. Do not use cleaning agents or detergents to clean the Device, as well as gasoline, furniture polish, or rough brushes, because this may cause deterioration to the surface of the Device.

23. Store the Device in a cool, dry location when not in use. Use the original packaging to repack the Device during such periods to prevent dust and dirt build-up.
24. Keep children away from the Device as it contains live parts. This Device is intended to be operated by adults only.

Warnings Related to the use of multiple Devices

It is not recommended to operate several Devices at once next to each other at a distance less than 1 meter between each Device in the enclosed area of application, to avoid the risk of oversaturation with ions.

Warnings Related to the Power Adapter

1. Only the original power adapter included in the packaging shall be used to charge the Device. The use of a non-original power adapter will void the manufacturer's warranty.
2. Do not use the power adapter of the Device to recharge any incompatible devices*.
3. Do not touch the power adapter or its cable with wet hands.
4. It is forbidden to connect a USB-PD (Power Delivery quick charge technology) power adapter to the Device.
5. Perenio IoT and/or the manufacturer shall not be liable for any damages resulting from the use of the power adapter in a manner other than as outlined herein.

ATTENTION! It is not allowed to charge the Cold Plasma Emitter from devices such as a PC, a laptop, a tablet, a smartphone, etc., since typical USB2.0/USB3.0 ports support a maximum current of up to 500mA and 900mA, respectively, at 5V which is insufficient to provide the required input power of 10W. At the same time, if any USB Type-C ports are available in the above devices, they are intended for recharging of such devices only, so Perenio IoT and the manufacturer do not guarantee normal and safe operation of the Cold Plasma Emitter in the case of using incompatible power adapters and assumes no responsibility for any possible damage that may be done from such use.

NOTE. If a portable charger is used to charge the Cold Plasma Emitter, you shall make sure that output parameters of such charger meet the requirements for the power adapter of the Cold Plasma Emitter*.

* For more information on the power adapter, see the description in Table 2 (Par. 1.2).

Warnings Related to External Influences

Atmospheric pressure: The Device shall be operated and stored in areas where the air pressure is normal or is less than two times higher or two times lower than the atmospheric pressure.

Temperature ranges: The Device shall be operated and stored at a non-freezing temperature only. For details, see Table 2 in par. 1.2 below.
Humidity: The Device shall be operated and stored in non-condensing environment only. For details, see Table 2 in par. 1.2 below.

Limitations Related to Ionic Substance in the CoV capsule

Based on performed safety tests of the Device, the ionic substance in trays located in the capsule are known to be non-toxic for humans.

Indications and Intended Use

The Device is NOT intended for treatment purposes but only for significant reduction of the level of viral concentration in the enclosed area of application.

Residual Risks, Contra-Indications and Side Effects

The Device shall not be used by people with reduced physical, sensory or mental capabilities, unless they have been given an adequate supervision by a person responsible for their safety.

For the following categories of people, a healthcare professional shall be consulted prior to their exposure to the Device: pacemaker patients, pregnant and breastfeeding women, minors, and people with a history of respiratory problems, heart or lung diseases.

Based on clinical trials performed, the only possible side effect reported by the volunteers exposed to the Device, is the dry eyes. Clinical trials evaluating the general safety and performance requirements of the Device will continue, and any updates will be included in the Manual available for downloading at **perenio.com/documents**.

Incident Reporting

In case of any health related or other incidents, that have occurred due to the use of the Device, the users shall report such incidents:

- by submitting the online PEWOW01COV User Feedback Form; or
- by e-mail at info@perenio.com; or
- by e-mail to the manufacturer at meddeviceinfo@joule.lv.

The user may also report any serious incidents in relation to the Device to the competent authority of the Member State in which the user is established.

1 General Description and Specifications

1.1 Device Purpose

PERENIO IONIC SHIELD™ PEWOW01COV, PEWOW01COVUK is a Cold Plasma Emitter which consists of two major components:

- CoV capsule with two trays filled with ionic substance based on salts of Mg, K, Au, Pt, Zn. The trays create anode and cathode;
- Electric multiplier in input of 5V and up to 2A and output 14kV applied to the anode and cathode to emit ions of the elements into the air.

The intended use of the Device is the significant reduction of the viral load caused by the known family of coronaviruses (including SARS-CoV-2), as the emitted ions have high enough kinetic energy to destroy positively charged outer shell of the membrane of coronaviruses and negatively charged RNA of such viruses.

The Device is for personal use in closed spaces. Ion concentration is most sufficient two meters around it. The recommended minimal distance from the Device is 25 cm.

Key functional features of the Cold Plasma Emitter are:

- The life cycle of CoV capsule is approximately 12 months of intensive use. The user can replace the CoV capsule with a new one;
- Operation from a built-in battery and/or the mains*;
- Ability to be charged from a portable charger*;
- Ease of use – no configuration required;
- Compact design and possibility to be operated in almost any closed space.

* For details, see the “Power” line in Table 2 (Par. 1.2).

Figure 1 – Exterior (Side view)

Figure 2 – Exterior (Top view)

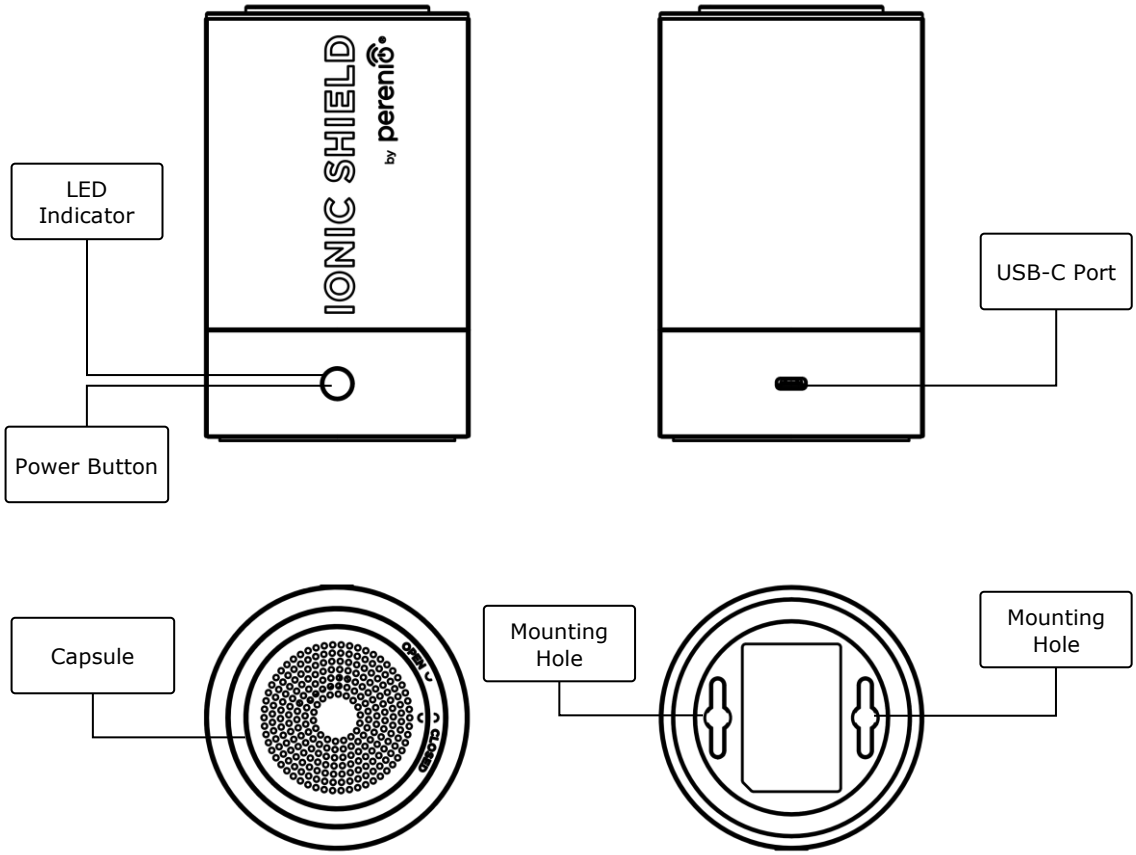

Figure 3 – Buttons, connectors and indicators

Buttons, Ports and Indicators

LED Indicator	Light indicator around the power button intended to show various Device states (See Table 1)
Power button	Device on/off button
USB-C Port	Port used to connect the Device to the source of power (Power Delivery is not supported)
CoV capsule	Replaceable module with metal salt composition from which negative, positive and bipolar ions are emitted
Mounting holes	Holes in the Device casing used for mounting purposes

Table 1 – LED Indicator statuses

Indicator	Status	Description
Green	On	The Device is switched off and plugged in to the mains socket. The battery is charged. Battery level: 75% to 100%
	Blinking	The Device is switched on and plugged in to the mains socket, or battery-operated. The battery is charged. Battery charge level: 75% to 100%
Yellow	On	The Device is switched off and plugged in to the mains socket. The battery is being recharged. Battery level: 30% to 74%
	Blinking	The Device is switched on and plugged in to the mains socket, or battery-operated. The battery is being recharged. Battery charge level: 30% to 74%
Red	On	The Device is switched off and plugged in to the mains socket. The battery is being recharged. Battery level: 1% to 29%
	Blinking	The Device is switched on and plugged in to the mains socket, or battery-operated. The battery is being recharged. Battery charge level: 1% to 29%
Blue	Blinking	The capsule is missing from the Device (The LED will blink for 3 seconds after pressing the power button)
Red-blue	Blinking	Battery malfunction (Please contact our Tech Support Department)
	Off	The Device is switched off and disconnected from the mains socket

1.2 Technical Specification

Table 2 – Basic technical specifications

Parameter	Value
Product Article	PEWOW01COV, PEWOW01COVUK
Device type	This Device is not a medical device
Capsule type	CoV capsule. Two trays filled with ionic substance (including salts of ions of Mg, K, Zn, Pt, Au) in porous structure of polymer gel
Principle of operation	Bipolar ionization of the ionic substance by applying 14kV to the trays which form anode and cathode
Ion emission intensity	Up to 40,000 ion/cm³ at 50 cm from the Device
Ionization area	1. Two meters around the Device with immediate effect once the Device is switch on (LED blinks green or yellow or red) 2. Closed space up to 60 m^3 after 30 minutes of operation of the Device
Recommended distance from the Device	At least 25cm distance from the Device in operation
Ozone generation	Below $0.16x10^{-8}$
Device calibration	Not required
Power	Power: up to 10W Input voltage: DC 5V Input current: 2A Internal voltage: 13.8KV Port: USB-C (Power Delivery is not supported)
Battery	Type: Lithium-ion, built-in Capacity: 2,600mAh Charging time: 3 hours Discharging time: up to 6 hours Standby discharge time: up to 60 days Service life: 600 recharge cycles
Power Adapter	Type: USB-C (Power Delivery is not supported) Input voltage: 100VAC to 240VAC

Parameter	Value
	Output: 5V/2A Standby Consumption: 0.1W (Max) Frequency: 60Hz
Working temperature	0°C to +40°C
Working humidity range	0% to 70% RH (non-condensing)
Storage temperature	0°C to +60°C
Storage humidity range	0% to 90% RH (non-condensing)
Light indication	LED indicator around the power button
Degree of protection	IP30
Installation	On a horizontal or vertical surface (mounting kit not included in the scope of supply)
Body material	ABS+PC
Color	White
Size (L x W x H)	Ø80mm x 132.5mm
Net weight	360g (450g with accessories)
Warranty period	Device: 2 year Capsule: 2 years Battery: 1 year Power adapter/cable: 2 years
Service life	Device: 2 years Capsule: 12 months of operation Battery: 600 recharge cycles
Shelf life of the capsule	7 years as from the date of manufacture
Certificates	CE, EAC, RoHS, UCKA

1.3 Device package

The following items and accessories are supplied within the Device package:

1. Cold Plasma Emitter – 1 pc.
2. CoV capsule – 1 pc.
3. USB-C Power adapter – 1 pc.
4. Quick Start Guide – 1 pc.
5. Perenio® Sticker – 1 pc.

1 2 3

Figure 4 – Scope of Supply*

* Images of accessories are provided for informational purposes only

1.4 Packaging and Labelling

The Device is supplied in a carton gift box of 104mm x 104mm x 170mm (LxWxH) containing the full name and marking of the Device, the list of accessories provided and basic technical specifications thereof, as well as the date of manufacture and information about the manufacturer.

Weights of the package are:

- Net weight: 450g;
- Gross weight: 560g.

2 Installation and Setup

ATTENTION! Before operation, you must carefully read and understand information in the "Warnings and Restrictions" Section of this document.

Below see possible installation areas for the Cold Plasma Emitter:

Figure 5 – Examples of installation*

* Images are provided for informational purposes only

To achieve the envisaged results, the areas of installation of the Device shall meet the following minimum requirements:

- Absence combustible gas, oxygen and/or hydrogen containers in the closed room, as well as air pressure below/above atmospheric;
- The size of the enclosed area of application for one device shall not exceed 60m^3;
- There is a possibility to close doors and windows in the room, as well as shut down the supply-and-exhaust ventilation and block the air ducts for the period of the Device operation;
- Ability to be at a distance of more than 25cm from the Device in operation;

- Ability to recharge the Device as needed;
- Flat and stable surface of installation.

2.1 Preparation for Work

1. Unpack the Device and accessories.
2. Remove the sticker from the top of the capsule using a special reel (See picture below).

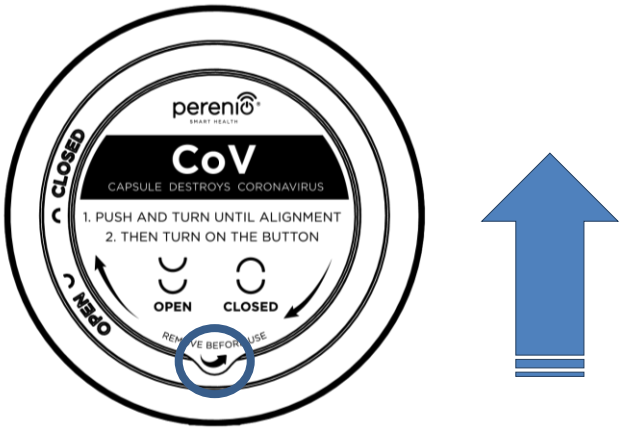

Figure 6 – View of the sticker atop the capsule

3. Make sure that the capsule is tightened properly. Fix it by pressing it on top (See Figure 7-a) and turning clockwise in the Device casing so that the marks are aligned in the "CLOSED" position (See Figure 7-c).

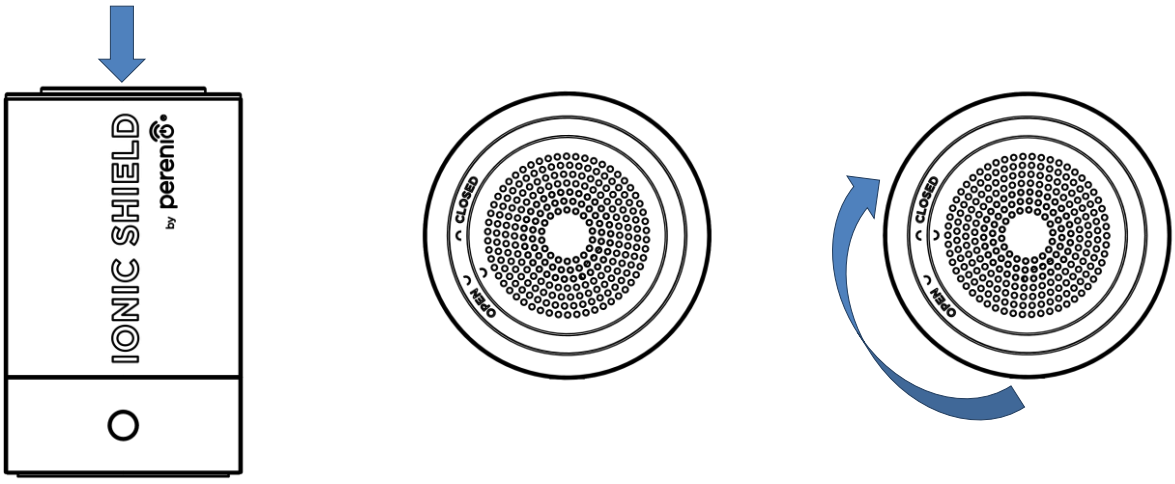

7-a – pressing on top 7-b – "OPEN" position 7-c – "CLOSED" position

Figure 7 – Tightening the capsule

4. Connect the Device to a power source using the original power adapter. The power button LED will turn green, yellow, or red depending on the battery level (See Table 1 "LED Indicator Statuses").

NOTE. The original power adapter (**output: 5V/2A**) included in the delivery package shall be used to connect the Device to the mains, or a compatible portable charger (See the "Warnings and Restrictions" Section).

5. Wait for the battery to be recharged (It takes no more than three (3) hours).

NOTE. When the battery is fully recharged, the power button LED will turn green (See Table 1 "LED Indicator Statuses").

6. Disconnect the Device from the power source (The LED will go off) and put it on a flat horizontal surface, or mount on a vertical surface using screws (not included in the delivery package) in a closed room or a vehicle.

NOTE. If the LED blinks after disconnecting the device from the power source, it means the Device is on, and ion emission was stared.

2.2 Operation Process

ATTENTION! Before operation, make sure you carefully read the "Warnings and Restrictions" Section of this document, and that the capsule is inserted into the Device and tightened properly.

1. To start the ion emission process, press the power button once (The LED indicator will start blinking according to Table 1 "LED Indicator Statuses").

ATTENTION! Do not touch the capsule while the Device is operating!

2. To stop the ion emission process, press the power button once again (The LED indicator will be on or off according to Table 1 "LED Indicator Statuses").

The average operating time of the Device depends on the size of the enclosed area of application (See Table 2 above).

NOTE. Continuous operation of the Device is allowed.

2.3 Removing and Replacing the CoV Capsule

ATTENTION! The capsule shall be removed, replaced and inserted with dry hands only, and after the Device is turned off and unplugged!

To replace a used-up capsule with a new CoV capsule, please follow the below steps:

1. Disconnect the Cold Plasma Emitter from the mains and turn it off (The power button LED will go off).
2. Carefully rotate the capsule counterclockwise in the Device casing (See Figure 8-a) until marks align in the "OPEN" position.
3. Pull the capsule edges to remove it from the Device casing (See Figure 8-b).
4. Unpack a new capsule and insert it into the Device casing so that the marks shall align in the "OPEN" position (Cee Figure 8-c).
5. Tighten the capsule by pressing it on top and turning clockwise in the Device casing so that the marks are aligned in the "CLOSED" position (see Figure 8-d).
6. The Device is now ready for use.

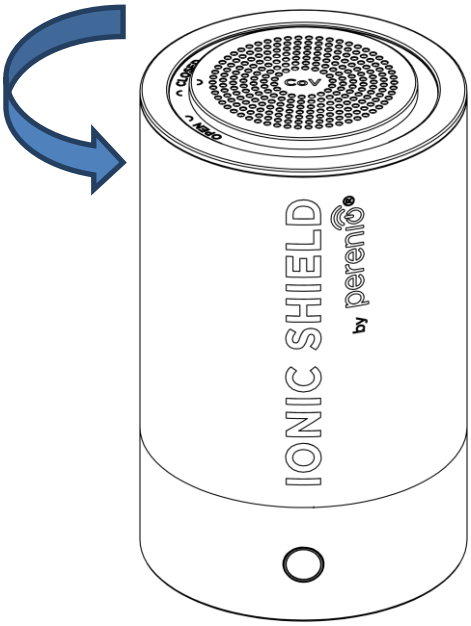

8-a - Untightening the capsule

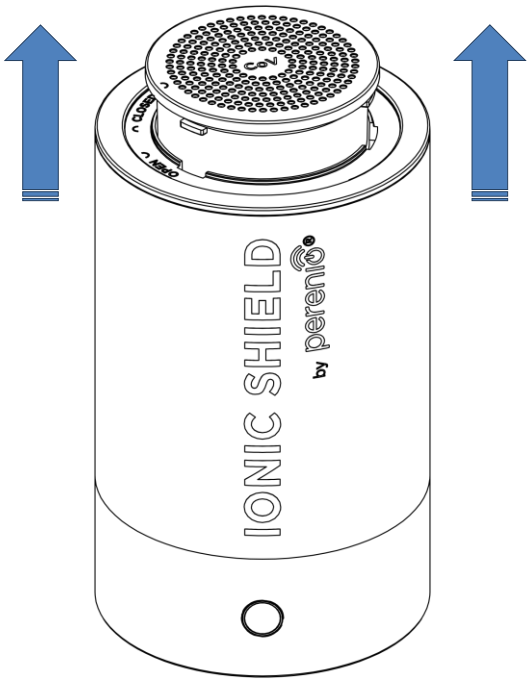

8-b – Removing the capsule

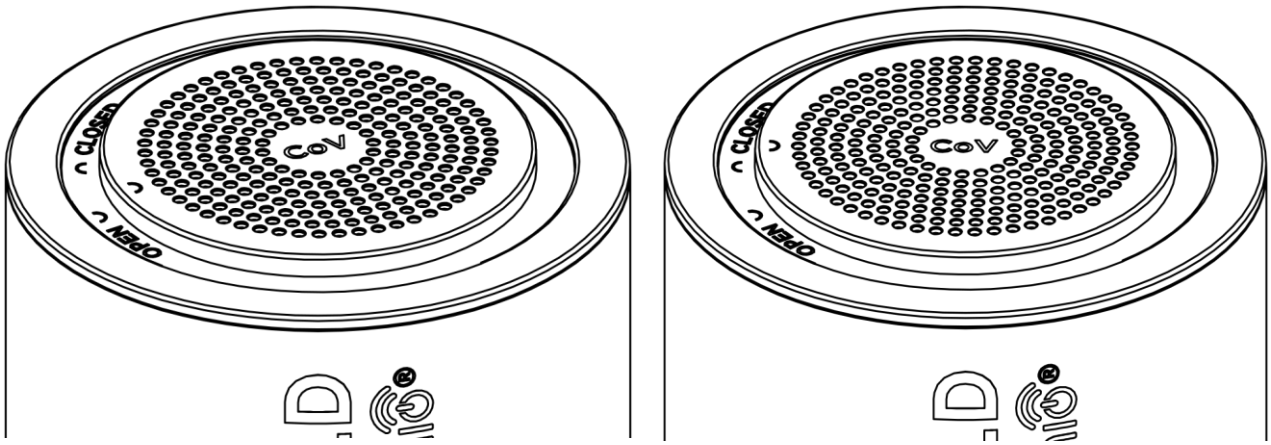

8-c – Inserted capsule 8-d – Tightened capsule

Figure 8 – Capsule replacement process

2.3.1 CoV Capsule of the Device

Only original capsule named CoV with ionic substance must be installed in the Device for the intended purpose of use. The CoV capsules are produced by the manufacturer only.

Table 3 **–** CoV Capsule

ID Code	Description
CoV	Significant reduction of the viral load in the enclosed area of application of the Device

Ionic solution for CoV capsule consists of chlorides of Mg_{12}, Ag_{47}, Cl_{17}, H_1, Pt_{78}, Au_{79}, K_{19}, Zn_{30}, namely: $AuCl_3$, $AgCl$, $AgNO_3$, $PtCl_4$, KCl, $MgCl_2$, $ZnCl_2$.

Liquid acrylic polymer is part of the solution.

The ionic solution is stable, it does not enter into a chemical reaction with water or air, it does not evaporate under natural conditions.

When filling the ionic solution to trays in order to create the stable ionic substance suitable for low power ionization, the polymer reacts with air under temperature above +40°C and forms a gel with the ionic substance which remains liquid in porous large crystal lattice of the polymer.

The ion solution does not crystalize and remains liquid, been capsulated in the pores, at a temperature from –55°C to +135°C.

There are two trays with ionic substance in CoV capsule. One of it is anode and the other – cathode for bipolar ionization.

For ionization, the energy applied to the electrons of the ionic substance is enough to overcome the ionization barrier potential. 14kV with power less than 10W is applied to anode and cathode in the Device.

The life cycle of CoV capsule is approximately 12 months of intensive use. Only CoV capsules produced and supplied by the manufacturer are suitable for the Device. The shelf life of the CoV capsule shall be seven (7) years as from the date of manufacture.

3 Maintenance and Repair

The Device does not require special maintenance in the normal course of operation. However, in order to maintain the proper state and stable operation of the Device the user shall carefully read and follow the below instructions, as well as the safety operation rules, warnings, and precautions (See the "Warnings and Restrictions" Section).

NOTE that failure to follow proper maintenance procedures may cause malfunction of the Device which may lead to damage of property or personal injury.

Cleaning and Maintenance Procedure

Before cleaning, the Device must be turned off and disconnected from the mains.

After cleaning, the user shall make sure that the capsule is installed correctly before turning on the Device.

NOTE that no modifications or disassembling of the Device or the capsule are allowed during the device maintenance.

If the Device is continuously used for an extended period of time, contamination such as dust may stick to its casing and the capsule. So, a dry cotton cloth shall be used to remove contamination.

If the capsule is worn out or damaged, it shall be replaced with a new one (not included in the scope of delivery). **Never use a damaged capsule!**

4 Warranty

The warranty period for the Device is **two (2) years** as from the date of its purchase by the user.

The Device repairs shall be carried out in the Authorized Service Centers (See **perenio.com** for details). The warranty procedure for CoV capsules is return for exchange.

In the case of warranty repairs or replacement, the user shall provide the seller of the Device (hereinafter referred to as the "Seller") with the sales receipt and the purchased Device.

A warranty card in relation to the Device shall be provided by the Seller and shall be deemed valid provided that it is correctly and completely filled in by the Seller. Upon the purchase, the user shall check that both the serial number and the model name of the Device corresponds to those indicated in the warranty card.

Incomplete warranty card shall be deemed not valid. In this case, it is recommended to contact the Seller and ask for a duly filled warranty card. It shall be also allowed to provide the original of the sales/cashier's receipt or such other documentary evidence of the fact and the date of sale of the Device. The date of sale shall be the date indicated on the sales/cashier's receipt or other relevant document. If the date of sale is not possible to be determined, the start of the warranty period shall be the date of manufacture of the Device.

The manufacturer shall guarantee that all materials, components and assemblies of **Perenio®** devices are free from defects under normal operation within the warranty period. The limited warranty shall be applied to the first user of **Perenio®** devices only and cannot be transferred to any subsequent users.

For warranty replacement, the Device must be returned to the Seller along with its receipt. Warranty obligations for **Perenio®** devices shall be provided in the country of their purchase only.

WARRANTY SERVICE PROCEDURE

In case any defect or deficiency of the Device is detected, the user shall contact the Authorized Service Center before the warranty period expires and provide the following:

1. The defective Device.
2. A valid warranty card, or the original of the document confirming the purchase of the Device, including clear indication of the name and the address of the Seller, as well as the date when this Device was sold.

LIMITATION OF LIABILITY

PERENIO IONIC SHIELD™ SHALL NOT BE SUBJECT TO a free warranty service in case of:

- Any damage caused by force majeure, accidents, and willful or careless acts (omissions) of the user or third parties;
- Any damage caused by the impact of other objects including but not limited to exposure to moisture, dampness, extreme temperatures or environmental conditions (or jumps in such conditions), corrosion and oxidation, as well as penetration of flood and liquid, and the effects of chemicals, animals, insects and byproducts thereof;
- In the event when the Device (accessories and/or components) was unsealed (the seal integrity was violated), modified or repaired by any party other than the Authorized Service Center, including repair works using unauthorized spare parts;
- Any defects or damage caused by improper or unintended use of the Device, including operation contrary to available manuals;
- Any defects caused by natural wear and tear;
- In the event when the Serial Number (Name Plates), the date of manufacture or the model name on the Device casing was in any way removed, erased, affected, altered or made illegible;
- In the case of violation of operating procedures and conditions, as well as the Device installation instructions described in the Manual;
- Cracks, scratches and other defects caused as a result of transportation and/or operation of the Device by the user or acts of negligence on his part;
- Mechanical damages that occurred after purchasing of the Device by the user including damage caused by sharp objects, bending, squeezing, falling, etc.;
- Any damage caused by non-conformity with the standards of power supply, telecommunication and cable networks or similar external factors.

THE PRESENT LIMITED WARRANTY IS AN EXCLUSIVE AND THE ONLY PROVIDED GUARANTEE THAT SHALL REPLACE ANY OTHER EXPRESS AND IMPLIED GUARANTEES. PERENIO IOT AND/OR THE MANUFACTURER PROVIDE NO GUARANTEES, WHETHER EXPRESS OR IMPLIED, BEYOND THE DESCRIPTION CONTAINED IN THE PRESENT DOCUMENT, INCLUDING THE IMPLIED WARRANTY OF MERCHANTABILITY AND FITNESS FOR A PARTICULAR PURPOSE. THE USER MAY USE DEFECTIVE OR INAPPLICABLE DEVICE AT HIS/HER OWN DISCRETION. PERENIO IOT AND/OR THE MANUFACTURER SHALL NOT BE RESPONSIBLE FOR ANY DAMAGES TO PROPERTY OR OTHERWISE CAUSED BY THE USE OF DEFECTIVE DEVICE.

The present limited warranty provides the user with certain legal rights. The user may also have other/additional rights in accordance with the applicable national laws relating to the sale of goods and/or consumer’s rights.

5 Storage, Transportation and Disposal of Devices

The Cold Plasma Emitter PEWOW01COV, PEWOW01COVUK may be shipped by any kind of covered vehicles (by rail, or road or in sealed heated airplane compartments, etc.) in accordance with the requirements of current regulatory documents applicable to fragile goods sensitive to moisture.

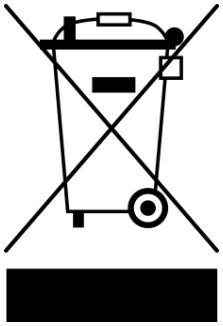

In accordance with the Waste Electrical and Electronic Equipment (WEEE)* regulations, all electrical and electronic products must be collected separately at the end of their service life, and cannot be disposed of together with unsorted household waste.

Parts of worn out devices must be separated and sorted by the material type. In this way, every user can contribute to reuse, recycling and other forms of recovery of waste electrical and electronic equipment. Proper collection, recycling, and disposal of such devices will help avoid potential environmental and health impacts from the harmful substances they contain.

To dispose of the device, it must be returned to the point of sale, or to a local waste collection and recycling company recommended by the state or local authorities. Disposal is carried out in accordance with the applicable laws and regulations of the respective country.

For more details on how to properly dispose of your used device, please contact your device supplier, your waste disposal service or the local authorities responsible for waste disposal.

NOTE. The user must comply with the temperature and humidity conditions of storage and transportation specified in the Table of technical specifications of the present Installation and Operation Manual.

* Waste Electrical and Electronic Equipment, or WEEE, means used electrical or electronic equipment, including all components, assemblies, consumables that are part of the equipment at the time it is taken out of service (including supplied batteries (if any), components containing mercury, etc.).

6 Other information

Manufacturer

Name	*SIA Joule Production*
Address	Bauskas iela 58A-15, Riga, LV-1004, Latvia
Contact	info@joule.lv

Trade Marks

Name	Perenio®, PERENIO IONIC SHIELD™
Licensed to	Perenio IoT Spol. s r.o.
Address	Na Dlouhem 79, Ricany – Jazlovice 251 01, Czech Republic
Contact	info@perenio.com

Info on Certificates and Declarations

Certificates	Certificate of Conformity (LVD) #2101604701E/L21/48003 as of January 15, 2021; Certificate of Conformity (ECD) #2101604701E/L21/48004 as of January 15, 2021.
Declarations	EU declaration of conformity

7 Troubleshooting

Table below shows typical errors and problems that may occur in the process of using the Cold Plasma Emitter.

Table 4 – Typical Errors and Troubleshooting Methods

#	Problem	Possible Reasons	Solution
1	The Device does not power on	Too low battery level	Charge the battery
2	The Device is not charging	Power adapter failure	Replace the power adapter
		Battery end of life	Replace the battery
3	Unusual noise or electrical crackling during operation	High humidity level in the room	Power off the Device for 30 minutes and move it to an area with low humidity. Power it on again. If the problem persists, please contact our Tech Support Department
		Malfunction of the capsule	Replace the capsule

8 Glossary

ABS + PC	Modern synthetic polymer with a high degree of impact resistance and elasticity
Capsule	The CoV capsule
CoV	SARS-CoV-2
Emission of ions	Removal of ions from the surface of the capsule salt composition by means of electric arc generated by the main device
IP30	Degree of protection of the Device, indicating that the parts inside the case are protected from the penetration of objects and solid bodies larger than 2.5mm. No moisture protection